SPLIT CASSETTE AIR CONDITIONER

ALFA TOP

Features

- SPLIT – indoor and outdoor units
- Refrigerant R32
- High efficiency DC Inverter split
- Remote control+wired controller
- WIFI module as standard
- High efficiency A++ (cooling), A+ (heating)
- Water pump inside
- 360 ^{0}C airflow
- Auto-mode
- I-feel mode
- Silenc mode
- ECO mode
- Rapid cooling/heating



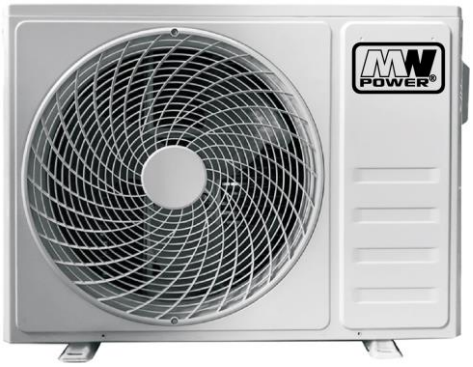



Mobile App (TUYA standard):

Google Play

Specification

			ALFA TOP 24K	ALFA TOP 36K
Type			heating pump	heating pump
Control type			Remote/wire controller	Remote/wire controller
Declared cooling capacity		btu/h	24000(7500～25500)	36000(10500～42000)
Declared heating capacity		btu/h	26900(7900～28500)	40000(11200～46000)
Declared cooling capacity		W	7030(2200～7500)	10550(3080～12300)
Declared heating capacity		W	7900(2320～8350)	11720(3280～13500)
Pdesignc		W	7030	10550
SEER declared		W/W	6,2	6,2
Energy Class			A++	A++
Pdesignh Average		W	6000	8500
SCOP Average declared		W/W	4,0	4,1
Energy Class(Average)			A+	A+
Declare capacity(-10℃)		W	5450	6800
Back up heating capacity(-10℃)		W	550	1700
Annual energy consumption	Cooling	kwh/a	402	596
	Average	kwh/a	2075	2902
Moisture removal		Liters/h	2,00	3,60
Indoor sound power(S/H/M/L/Mute)		dB(A)	59/56/52/49/47	63/60/59/57/53
Indoor sound power(Standard rating conditions)		dB(A)	56	60
Outdoor sound power(Standard rating conditions)		dB(A)	64	67
Indoor sound pressure(S/H/M/L/Mute)		dB(A)	49/46/42/39/37	53/50/49/47/43
Indoor sound pressure(Standard rating conditions)		dB(A)	46	50
Outdoor sound pressure(Standard rating conditions)		dB(A)	54	57

SPLIT CASSETTE AIR CONDITIONER

ALFA TOP

Electrical Data				
Power supply			Indoor：220-240V~/50Hz/1P Outdoor：220-240V~/50Hz/1P	Indoor：220-240V~/50Hz/1P Outdoor：220-240V~/50Hz/1P
Power supply side			Outdoor	Outdoor
Voltage Range		V	176~265	176~265
Cooling Operating current	Indoor	A	0.8(0.2～1.0)	0.6(0.3～0.7)
	Outdoor	A	10.2(3.8～14)	14.6(1.0～20.3)
Heating Operating current	Indoor	A	0.8(0.2～1.0)	0.6(0.3～0.7)
	Outdoor	A	8.5(4.0～13)	15.0(1.4～16.3)
Cooling Power consumption	Indoor	W	100(20～135)	120(50～140)
	Outdoor	W	2390(710～3165)	3180(210～4460)
Heating Power consumption	Indoor	W	100(20～135)	120(50～140)
	Outdoor	W	2330(745～2965)	3280(300～3560)
Max. powerconsump		W	3300	4600
Max.current		A	15	21
Refrigerating System				
Refrigerant type/Charge/GWP/CO2 equivalent			R32/1.35kg/675/0.911tonnes	R32/2.10kg/675/1.418tonnes
Compressor type			Rotary	Rotary
Indoor air circulation Cooling/heating		m3/h	1400/1500	1800/1900
Indoor fan type			Propeller fan	Propeller fan
Indoor fan speed S/H/M/L/Mute	Cooling	rpm	680/590/500/430/360	800/720/680/620/520
	Heating	rpm	680/590/500/430/360	800/720/680/620/520
	Dry	rpm	430/430	620/620
	Sleep	rpm	680/590/500/430/360	800/720/680/620/520
Outdoor fan type			Propeller fan	Propeller fan
Outdoor air circulation		m3/h	3500	5000
Outdoor fan speed		rpm	880	930
External Static Pressure(Rated)		Pa	0	0
External Static Pressure(Range)		Pa	0	0
Connections				
Connecting Wiring	Core x Size		outdoor：3*2.5mm²+5*1.5mm²; indoor：5*1.5mm²	outdoor：3*2.5mm²+5*1.5mm²; indoor：5*1.5mm²
Expension device			Capillary +EXV	Capillary +EXV
Connecting Pipe	Gas	Inches	1/2"	5/8"
	Liquid	Inches	1/4"	3/8"

Others				
Max. refrigerant pipe length		m	30	50
Max. difference in level		m	15	25
Operation temperature range		℃	16-31	16-31
Ambient temperature range	Outdoor	℃	Cooling:-15-50/Heating:-15-24	Cooling:-15-50/Heating:-15-24
	Indoor	℃	Cooling:17-32/Heating:0-30	Cooling:17-32/Heating:0-30
Net dimensions (W x H x D)	Indoor	mm	840×840×245	840×840×290
	Outdoor	mm	845×700×342	910×804×378
	Panel	mm	950x950x45	950x950x45
Net weight	Indoor	kg	24	26
	Outdoor	kg	40	55
	Panel	kg	6	6

Technical drawings

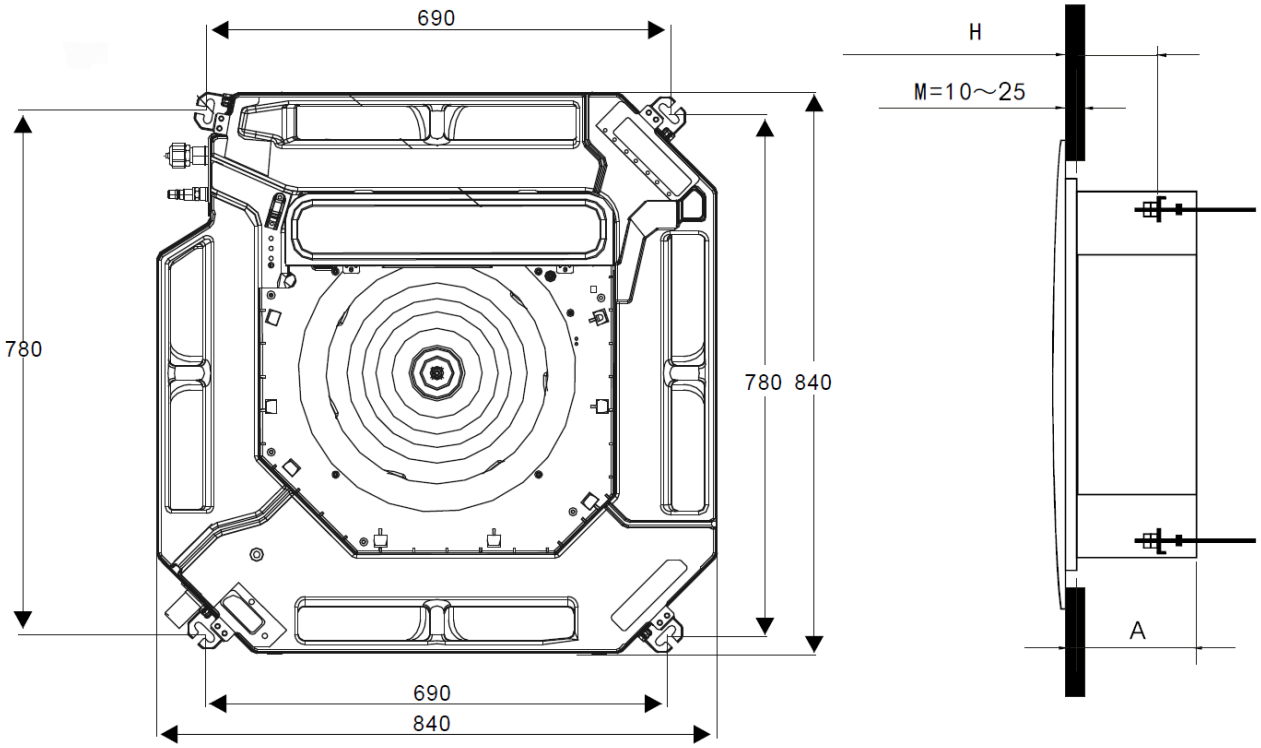

unit: mm

	A	H
24K	245	130~135
36K	290	175~180

MODEL	A	B	C	D	E	F	H
24K	845	574	348	375	358	342	700
36K	910	607	390	421	391	378	804

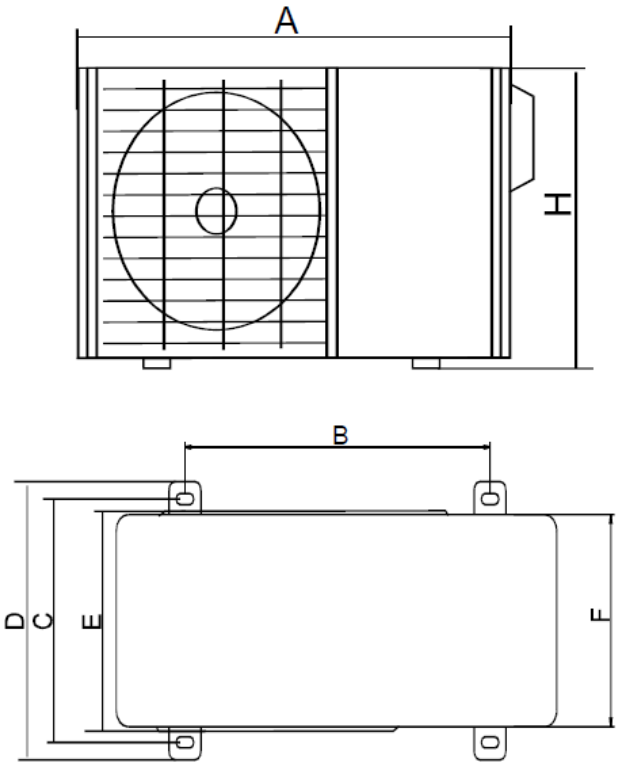

Efficiency labels

